SolidWorks WORLD 2010

How to Spell GD&T Part II:

Revenge of the Circled Letters

Thomas Allsup

Return of the Jedi

- Originally to be titled "Revenge of the Jedi" but producers thought the Jedi wouldn't seek revenge.
- Some posters were made early
  - One such poster hangs in my home.
- I have decided that GD&T is not as noble as the Jedi.

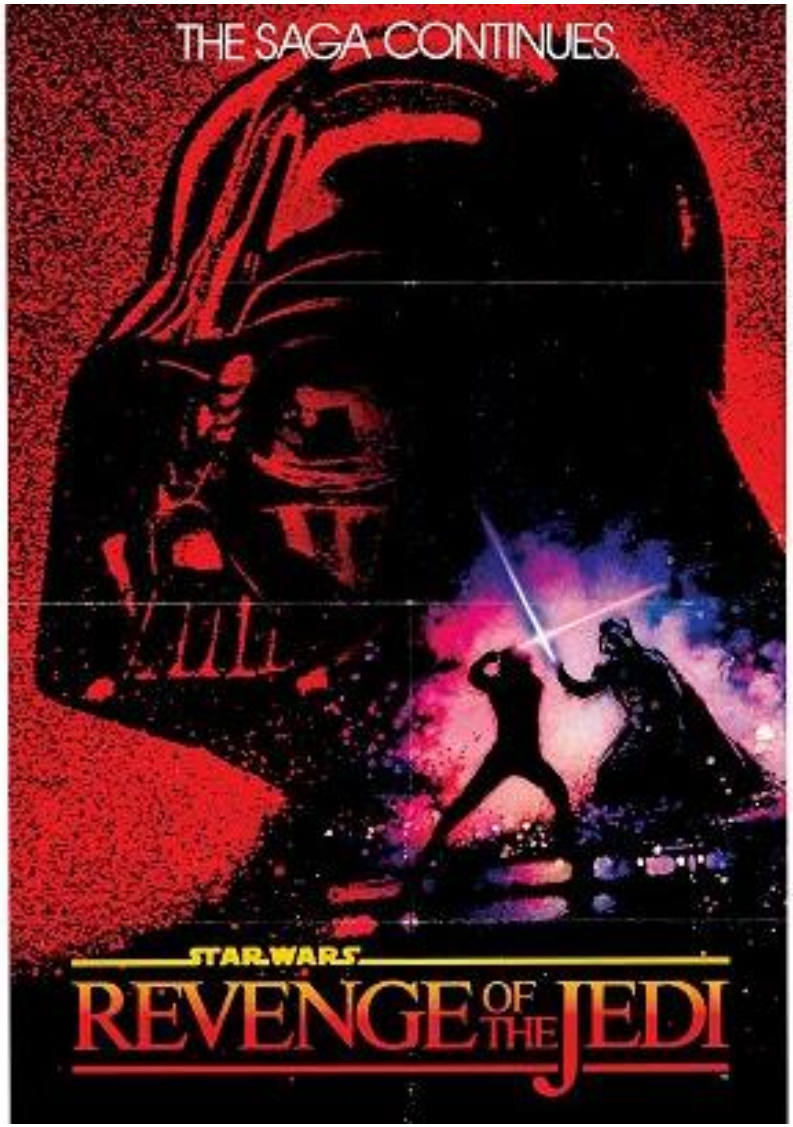

SolidWorks WORLD 2010

Downloads

- This presentation is available for immediate download at our website
  - www.anidatech.com/SWW2010GDT2.ppt
- Additionally, you can download part one from the SWW2009 website or from our website:
  - www.anidatech.com/SWW2009GDT1.ppt
- And as an added bonus, you can also download the *"What's New in ASME Y14.5M-2009"* seminar from the San Antonio SolidWorks Technical summit:
  - www.anidatech.com/SWTS2009GDT.ppt

Thomas Allsup

- Co-chair of North Texas SolidWorks User Group
- BSME 1987 Oklahoma State University
- MSME 1990 University of Texas at Arlington
- I took my first real GD&T course in 1998 and have been teaching it ever since
- I took my first SolidWorks class at Christmas 1999 using SolidWorks 1998 and have been using it ever since

Previously on *"How to Spell GD&T"*

- When last we talked, we were near the home of a big mouse and an ocean.
  - The ocean was on the other side last time.
  - Plus last year, I had to follow a sumo on a mini-motorcycle.
  - This year it was only James Cameron and Avatar.
- More importantly, there are a few other new things.
  - The ASME Y14.5M-1994 that we have used seemingly forever was updated!

What a Long Strange Trip It's Been

- The ASME took over the publication of the standard from ANSI in 1989.
  - I still cringe when I hear people say they know ANSI GD&T, it is kind of like saying you know Latin as you try to speak Spanish
- 1994: slightly updated with the biggest change being the addition of metric dimensions - the "M" in the title.
  - 1999: reaffirmed without changes.
  - This is the GD&T standard that an entire generation has used for creating and interpreting drawings.

The More Things Change…

- Last year, the standard was changed significantly for the first time since 1994.
  - Introducing the new ASME Y14.5M-2009!
  - New standard has new symbols & refines some existing terms but the most obvious change is the order & segregation of the 5 types of controls.
- None of the main 14 GD&T symbols have changed.
  - This was the topic of last year's part one.

Five Kinds of Geometric Control

- The controls act just like they sound like:
  - Form
  - Orientation
  - Profile
  - Runout
  - Location
- This is how we get
- F O P R L!

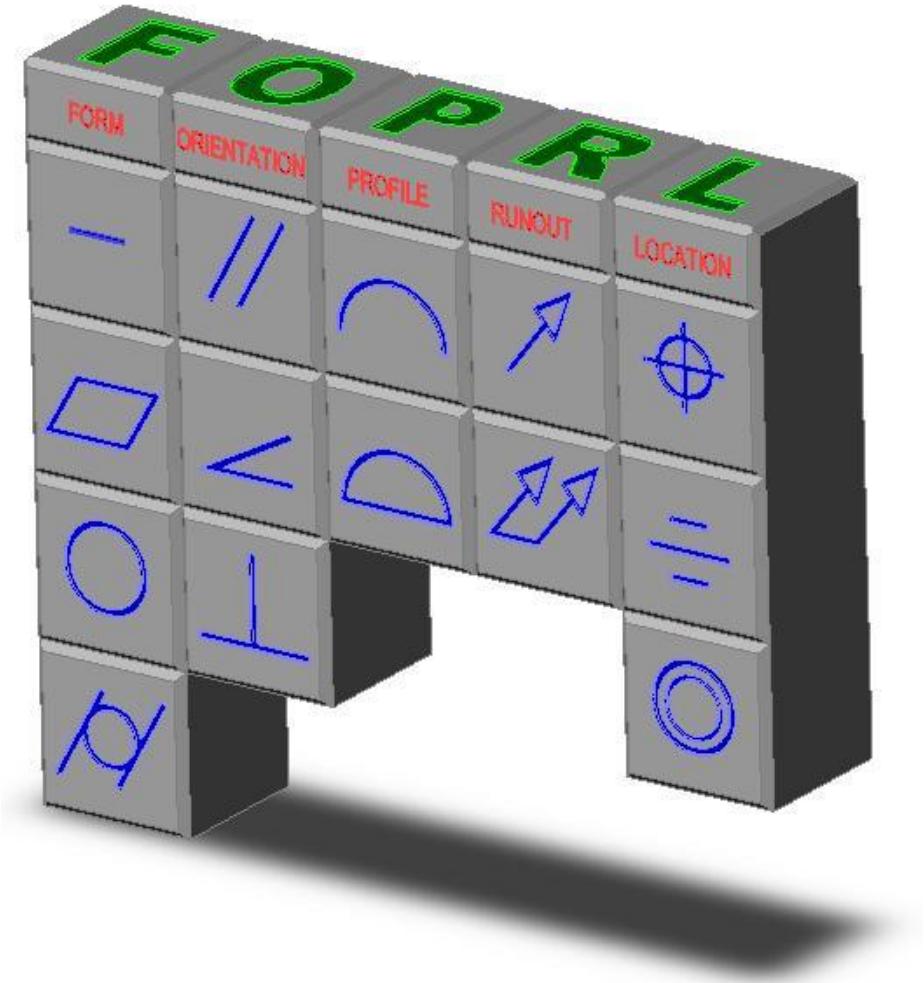

SolidWorks WORLD 2010

FOPRL Chart

Periodic Table of GD&T Symbols

FORM	ORIENTATION	PROFILE	RUNOUT	LOCATION
Straightness 6.4.1	Parallelism 6.6.3	Line Profile 6.5.2(b)	Circular Runout 6.7.1.2.1	Position 5.2
Flatness 6.4.2	Angularity 6.6.2	Surface Profile 6.5.2(a)	Total Runout 6.7.1.2.2	Symmetry 5.13
Circularity 6.4.3	Perpendicularity 6.6.4			Concentricity 5.12
Cylindricity 6.4.4				

Thomas Allsup 11/5/98

Never Say Never

- When you start using the new standard, your drawing formats should be revised to have words like:
  - “Interpret this drawing using ASME Y14.5M-2009"
- But don't throw your old standard away:
  - You might need it to interpret the drawings you created or receive from others that were created from 1994 to 2009.
  - Don’t use the drawing date to determine what standard to use, look for the note on the drawing.
- If you create all your own drawings and never get drawings from customers then you can keep using the old standard.
- If you are like me and have to interpret whatever is thrown at me then you need to buy and start studying the new standard but keep all the old ones too.

SolidWorks WORLD 2010

Old and New

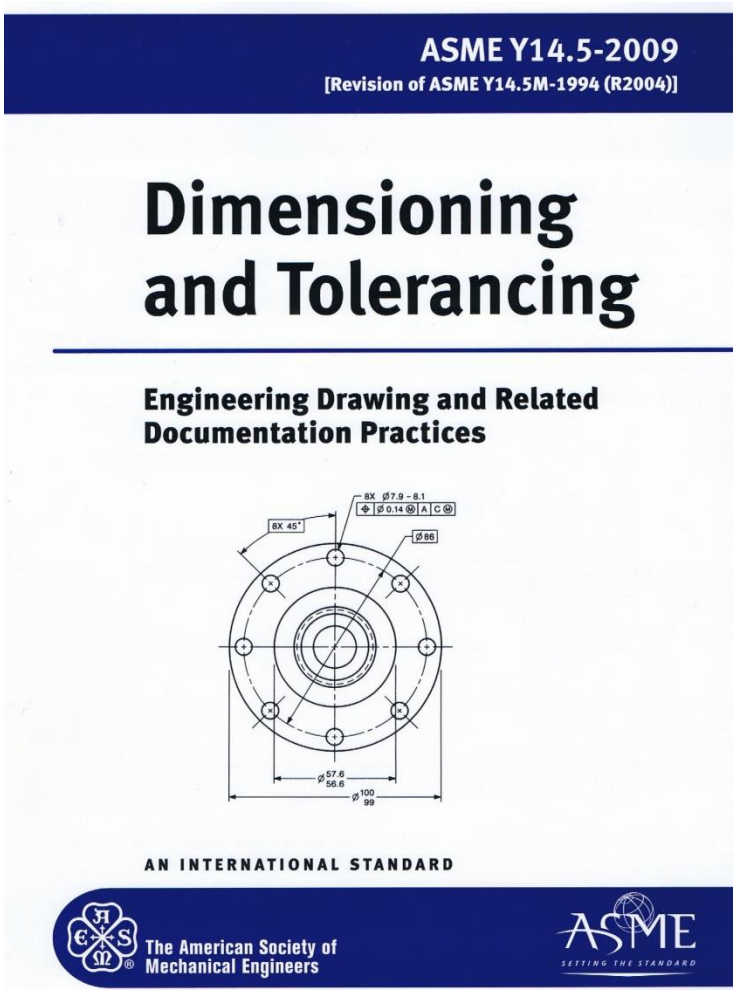

Where Does All This Leave Us?

- ASME Y14.5M-2009 didn't change the 14 symbols but there were lots of other changes.
  - Take a look at the San Antonio SolidWorks Technical Summit "What's New in the ASME Y14.5M-2009 for SolidWorks Users" if you want a short but detailed list of the changes.
- There are a couple new circled letters which do impact this talk.
  - So maybe, we should move forward.

Circled Letters?

- What exactly are the circled letters in GD&T?
  - Thanks, that's a good question.
- The circled letters are known as modifiers.
  - And we all know how much engineers and designers like to modify things…
  - Wait for laughter.
- Seriously, GD&T modifiers change the extent or shape of some other control.

Modifers of Extent and Size

- There is no official grouping of modifiers, but there is a logical division:
- Extent
  - Changes where the tolerance is measured.
- Size
  - Changes the tolerance based on the size of the feature.

List of Modifers

- Extent:
  - Free State
  - Tangent Plane
  - Projected Tolerance
  - Unequally Disposed Profile (new)
- Size:
  - Regardless of Feature Size (RFS)
  - Regardless of Material Boundary (RMB)
  - Maximum Material Condition (MMC)
  - Maximum Material Boundary (MMB)
  - Least Material Condition (LMC)
  - Least Material Boundary (LMB)
  - Independency (new)

Ⓕ Ⓣ Ⓟ Ⓤ Ⓢ Ⓜ Ⓛ Ⓘ

Free State

- Free State Variation : A term used to describe distortion of a part after removal of forces applied during manufacture.
- You see this on lots of flexible parts, like rubber gaskets, wire forms, and some thin walled plastic components.
- Free state is 20° C and no jigs or fixtures.

Ⓕ

Tangent Plane

- This modifier tells the inspector to place a tangent plane on a surface and measure the gauge plate, not the part.
- This modifier is commonly used by orientation controls.
  - It will become clear a little later when we look at tolerance shapes.

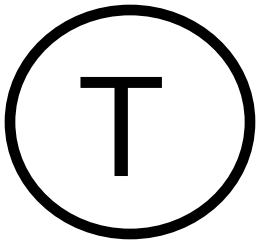

Projected Tolerance Zone

- Used only with position & orientation tolerances.
- Mainly position and perpendicularity.
- Circled P appears after any modifiers and is itself followed by the projected height.
- The words are "**with a projected tolerance zone of …**"
- For clarification, a chained line can be drawn and dimensioned with a minimum height dimension (not a basic dimension).

Ⓟ

Projected Tolerance Zone Examples

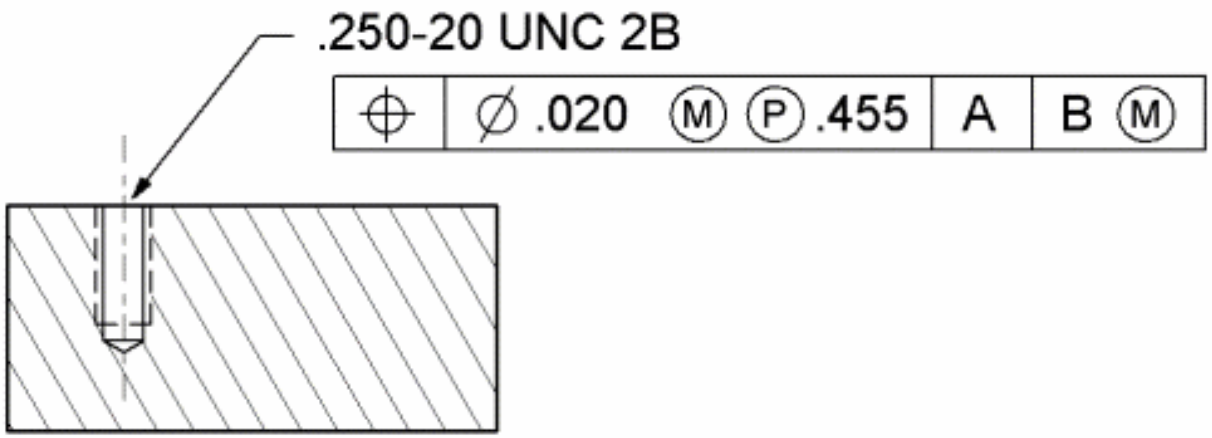

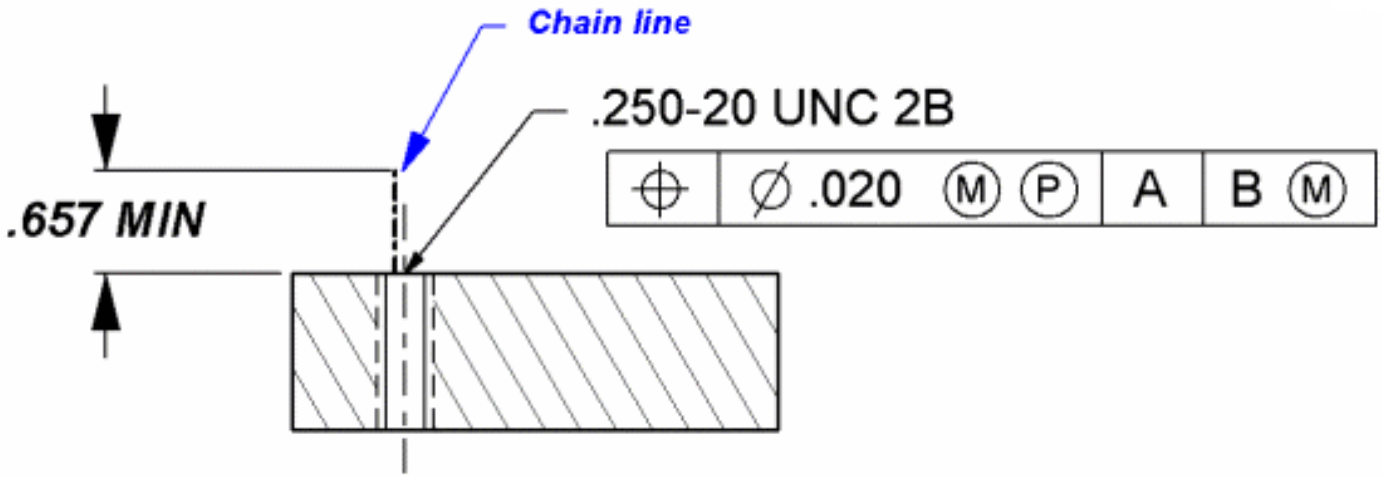

Unequal

- New Unequally Disposed Profile Symbol is a “U” in a circle.
- This concept has always been in the standard but required you use chain lines and basic dimensions to determine the distribution of a profile tolerance zone other than 50%-50%.
- In the feature control frame you add the symbol and the value of how much material you allow to be added.

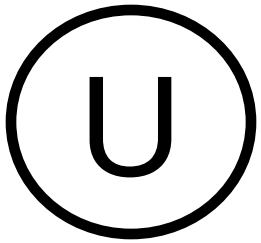

U Example 1 – No U

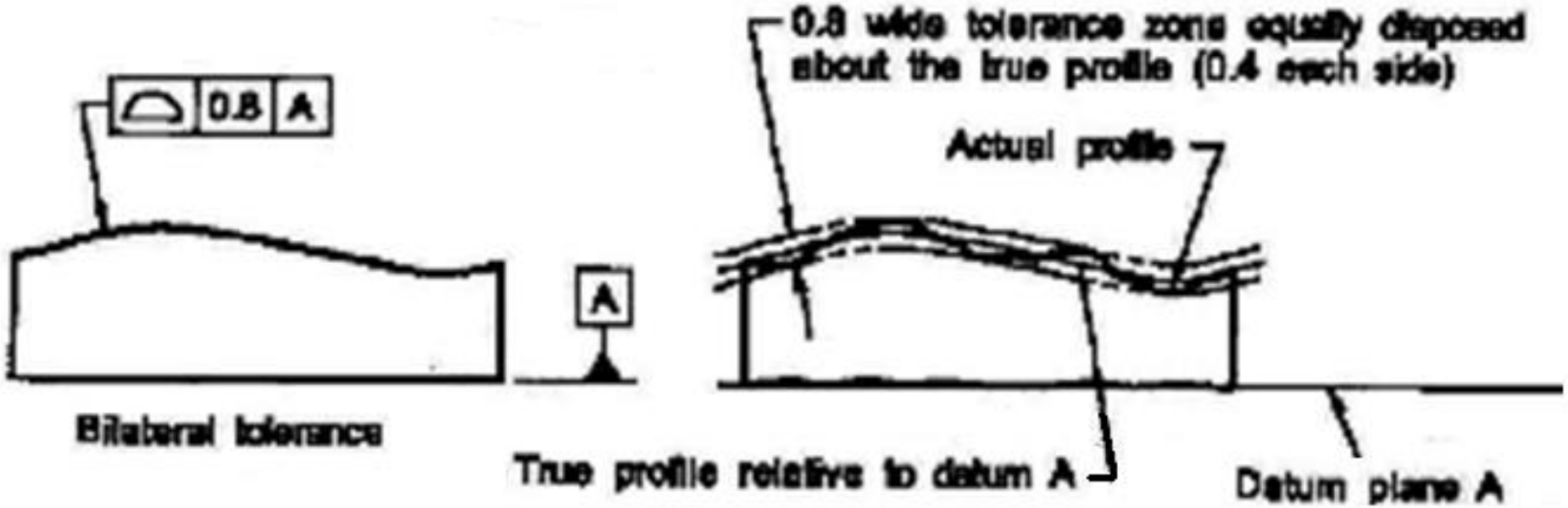

U Example 2 – U with Zero

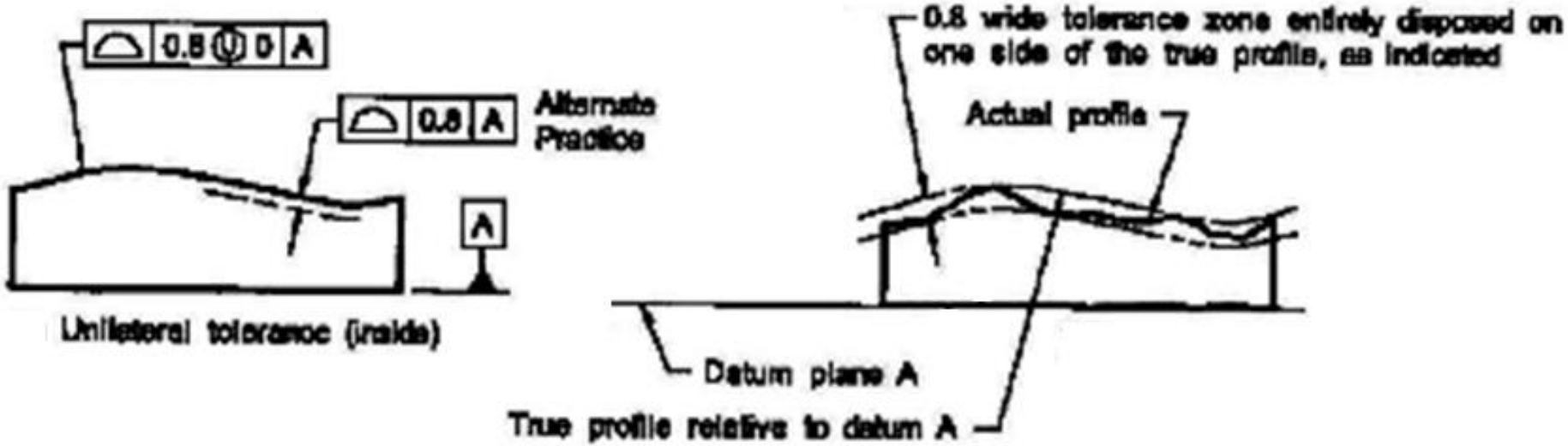

U Example 3 – U maximum

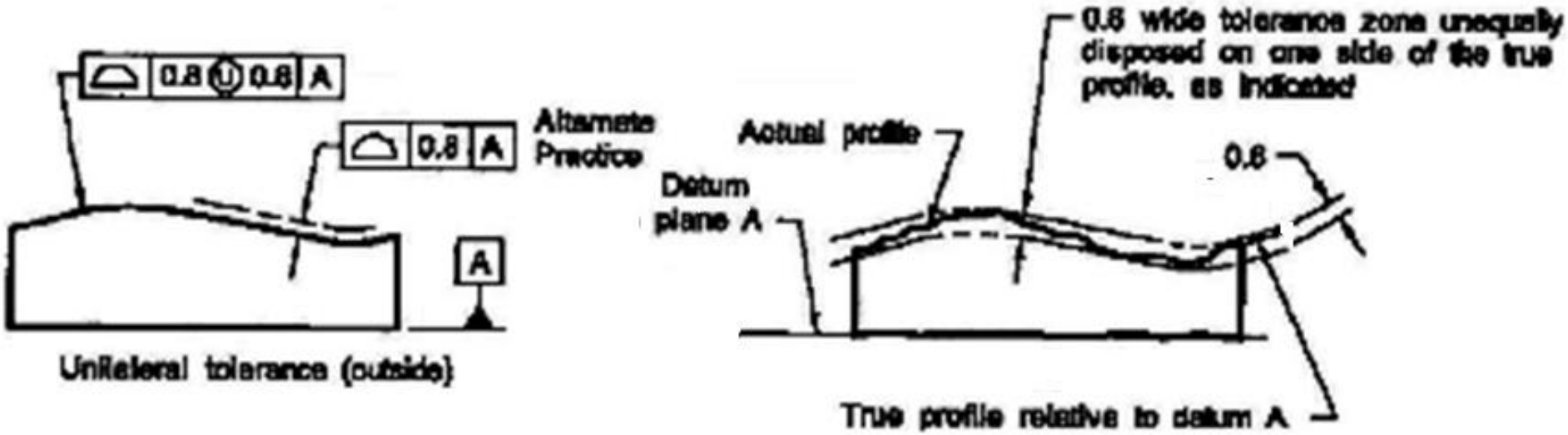

U Example 4 – Arbitrary Value

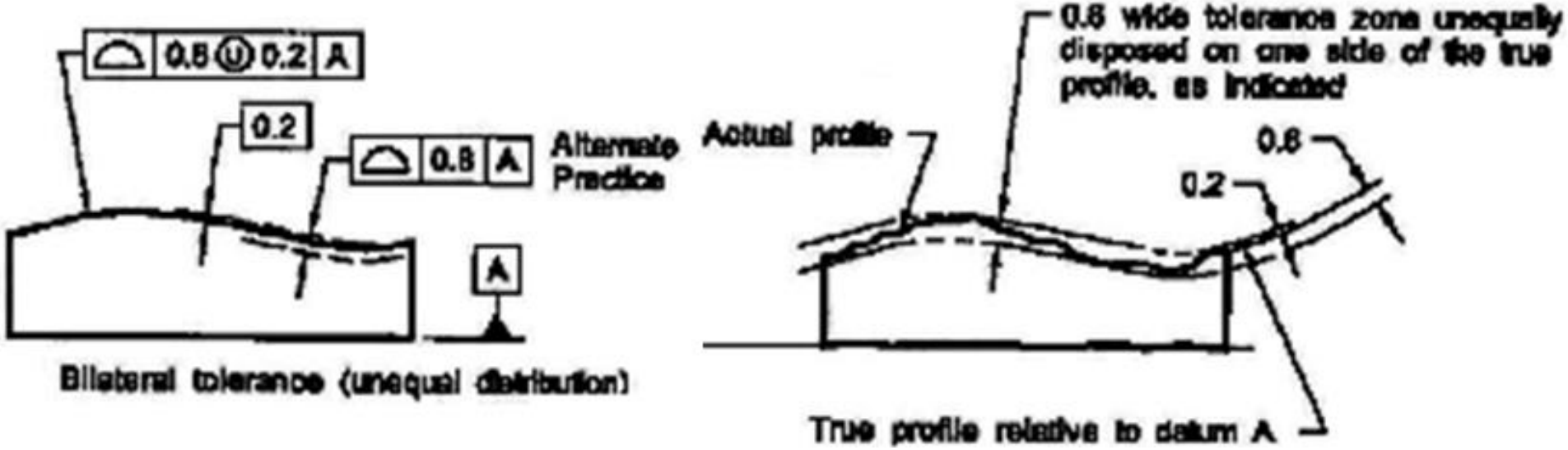

U - SolidWorks

- Somehow ASME thought U in a circle was easier than selecting tools, sketch tools, offset entities and changing to construction lines.
- How did a SolidWorks slide get into this GD&T talk?

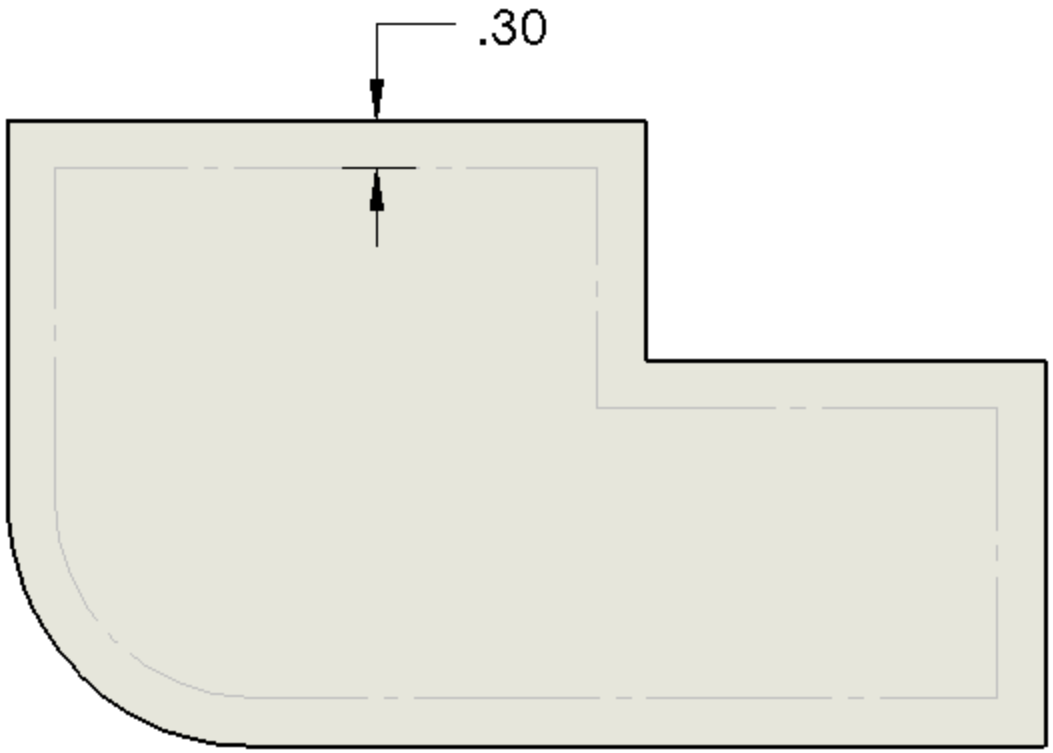

Modifiers of Size

- Extent modifiers were easy.
- Now we have to move on to modifers for size.
- These are difficult for a couple reasons that will become painfully obvious shortly.
- However difficult, these modifiers are extremely important.
- Take a breath, and let’s go…

Size Isn't Important

Physical features are grouped into two distinct regimes:

- Features that do not depend on size
  - Single surfaces, lines, arcs
  - Sadly there isn't a more clever name
- "Features of size"
  - Plates, holes, slots, balls

What's a Feature?

- ASME Y14.5M-1994 Section 1.3.12 Defines a Feature as the general term applied to a physical portion of a part, such as a surface, pin, tab, hole, or slot.
- In other words, any distinctive portion of a part that might be dimensioned is a "feature".
- As SolidWorks users we are very comfortable with this definition.

What is Size?

- 1.3.24 Actual Size : The general term for the size of a produced feature.
  - This is what you measure on a part.
- 1.3.27 Limits Of Size : The specified maximum and minimum sizes.
  - This is the dimensions and tolerances found on the drawing.
- 1.3.28 Nominal Size : The designation used for purposes of general identification.
  - 28 Gauge wire, 1” Schedule 40 pipe, 2x4 (lumber)

Feature of Size Examples

- One cylindrical surface
- One spherical surface
- Set of two opposed elements
- Set of opposed parallel surfaces

The “Caliper” Check

Things that you are measure with a pair of calipers are features of size:

- Inside Jaws
- Outside Jaws
- Depth Gauge

Regardless of Feature Size

- This is the default if no modifier is given.
- The tolerance zone is not affected by the actual size of the feature.
- You don’t see this symbol anymore except in GD&T training sessions.
- Just because you don’t see the symbol doesn’t mean the concept isn’t used all the time.

Ⓢ

Second Rule of GD&T

- Remember the first rule of GD&T states the limits of size are the first magnitude of control.
  - I had an engineering professor who said “remember is defined as recall or boy do you have some studying to do”.
- The second rule of GD&T states that if the geometric tolerance is applied to a feature of size then it is assumed to be regardless of feature size.

Maximum Material Condition

- The stated tolerance applies when the most material is there.
  - The tolerance zone increases when there is less material – you get a "***bonus tolerance***" if a hole is large.
- Examples:
  - Thickest plate
  - Smallest hole

Ⓜ

“Worst Case Scenario”

MMC is normally valid only when all of these conditions exist:

- Two or more features are interrelated with position or orientation.
- At least one of the features is a feature of size.
- The feature with which MMC is to be applied must be a feature of size with a axis or center plane.
- Note: We used to call MMC, the “worst case”.

Least Material Condition

- The stated tolerance applies when the least material is there.
  - This is a rarely used modifier.
- Examples:
  - Thinnest plate
  - Largest hole

Ⓛ

Why is LMC rare?

- Most tolerance analysis is checking whether part will go together.
- If you are checking if a male part will go into a hole, you need to know the largest male part and the smallest hole - both of which are MMC.
- LMC can be used to see what the maximum clearance is in a system but that analysis is pretty rare.
- Anyway who drove an AMC Gremlin wished they had done a “gap” analysis.

New Names, Old Concepts

- Someone finally figured out that datums are theoretical so there is no “material condition”.
- ASME Y14.5M-2009 section 1.3.3,1.3.4, and 1.3.49 introduce new datum terms for
  - Least Material Boundary (LMB)
  - Maximum Material Boundary (MMB)
  - Regardless of Material Boundary (RMB)
- The symbols are the same for the features “conditions”.
- Features will continue to use the terms LMC, MMC, and RFS.

Slightly Irregular

- ASME Y14.5M-2009 Section 1.3.32.2 introduces the new term "Irregular Feature of Size"
- We've always had features of size
- Remember the "caliper test"?
  - Cylindrical surface
  - Spherical surface
  - Two opposed parallel elements or surfaces
- These are now called "regular" features of size
- Now we get to introduce "Irregular" Features of Size

Shapes of Things

- The new concept from ASME Y14.5M-2009 is that now an arbitrary profile (possibly an irregular feature) can be identified as a datum.
- If that profile follows the “caliper test” then material modifiers can be applied.
- Imagine extruded shape profiles, key holes, splines, or other unusual shapes now being able to be considered a datum.

SolidWorks WORLD 2010

Perfect Form?

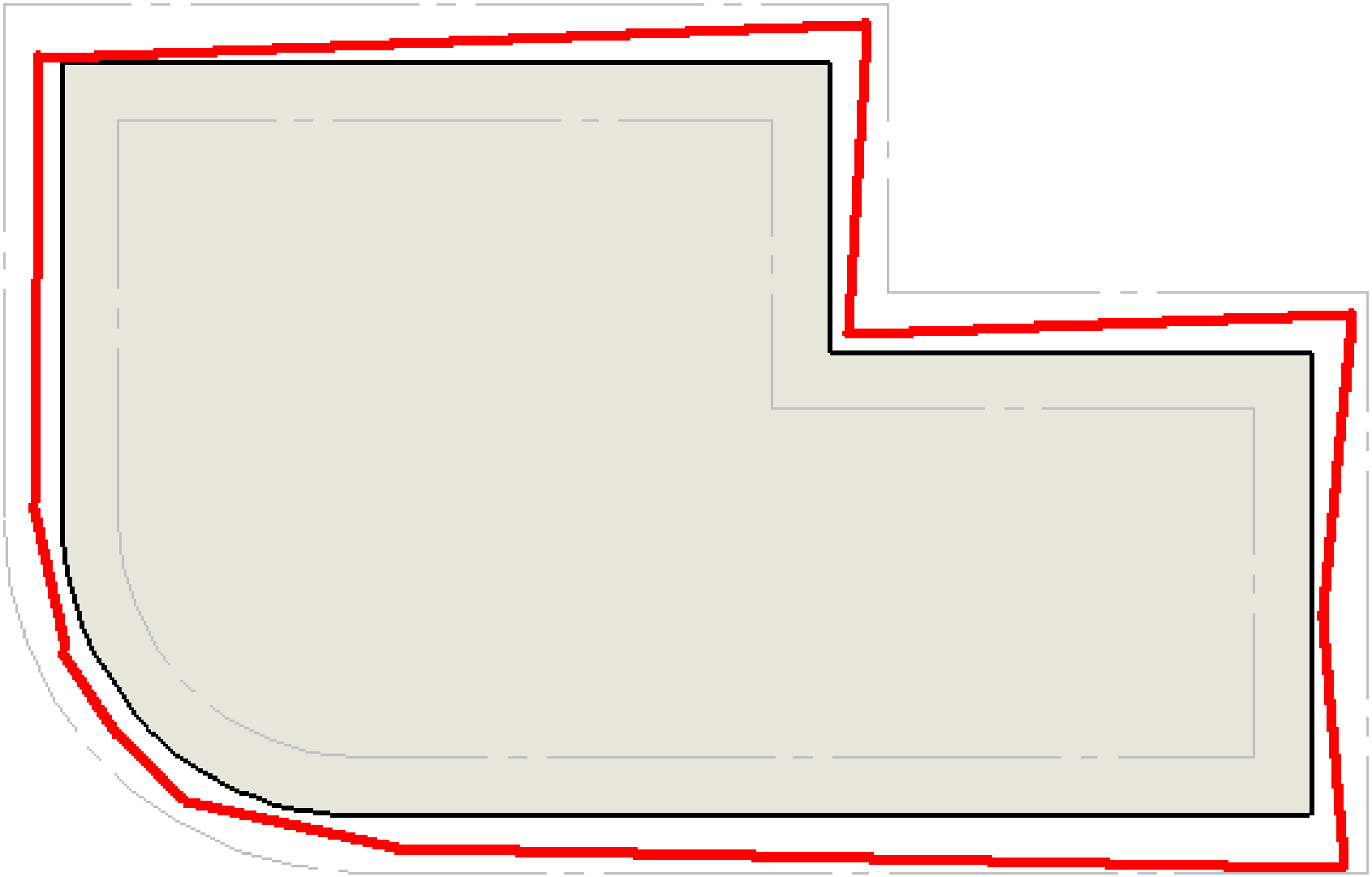

Independent

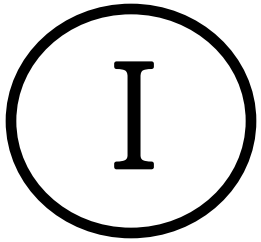

- New Independency Symbol is an “”I” in a circle.
  - Previous standard required you write out “Perfect Form at MMC (or LMC) is not required.”
- Example: If you say a shaft is toleranced at MMC then it must be straight but size may be all that is important to you so you can
- This choice of symbol and wording baffles me – I would have gone Old School Ghostbusters and made a circular no symbol with a slash through it and “PF” inside.

Independency

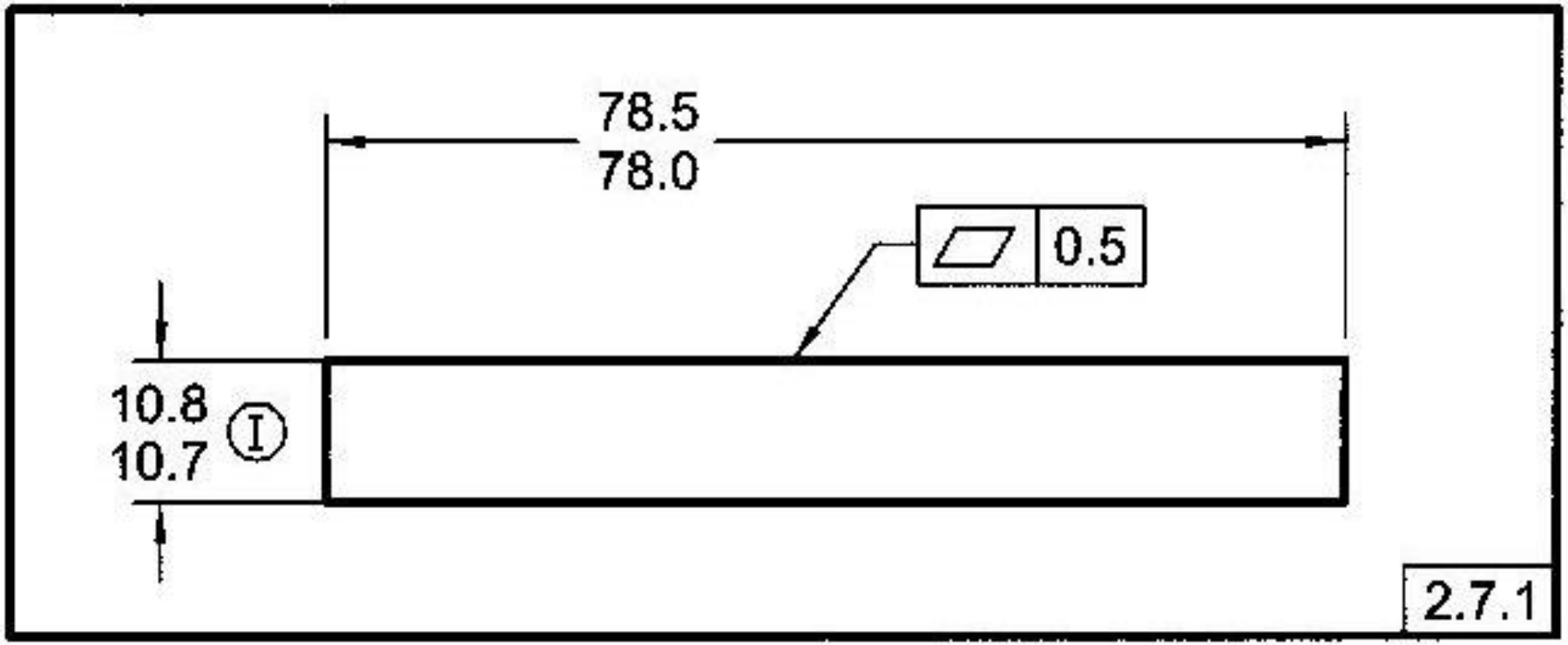

Form Controls

- Remember there are 4 form controls.
  - Straightness
  - Flatness
  - Circularity
  - Cylindricity
- Size doesn't affect form so you can't modify most of them with S,M, L, or I.
- U is only for profile.
- However, it is very acceptable to put F or T.
- P works only with straightness and because of an important exception M can be applied.

Form

Straightness Exception

- Rule 1 has four (count'em four) exceptions:
  - Stock parts : Bars, sheets, tubing, structural shapes
  - Parts subject to free state variation
  - Add note to a surface or feature: PERFECT FORM AT MMC NOT REQUIRED.
  - ***Straightness tolerance on features of size with MMC applied.***

Straightness Tolerance

on Features of Size with MMC Applied

- Pretty much, just like it sounds.
- The shaft shown below can be shaped like a “smiley face” and still be acceptable.

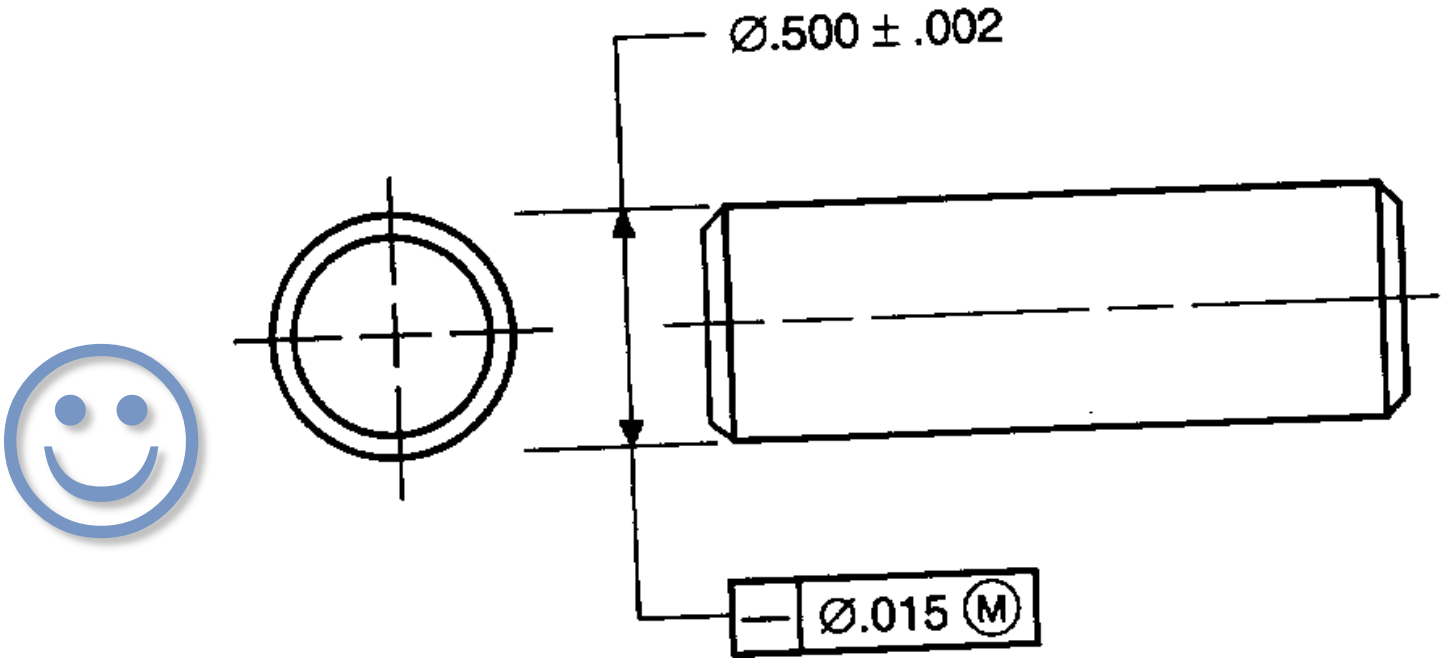

Orientation

- Remember there are three orientation controls:
  - Parallelism
  - Angularity
  - Perpendicularity
- Depending upon the features you can modify orientation controls with everything except U.

Profile

- Remember there are two profile controls:
  - Line Profile
  - Surface Profile
- You can modify profile with all the modifiers.

Runout

- Remember there are two runout controls:
  - Circular runout
  - Total runout
- You can’t modify any runout controls.
  - That’s simple!

Location

- Remember there are three kinds of location controls:
  - Position
  - Symmetry
  - Concentricity
- Position can be modified with everything except U.
- Symmetry and Concentricity can only be modified by F.

Example #1

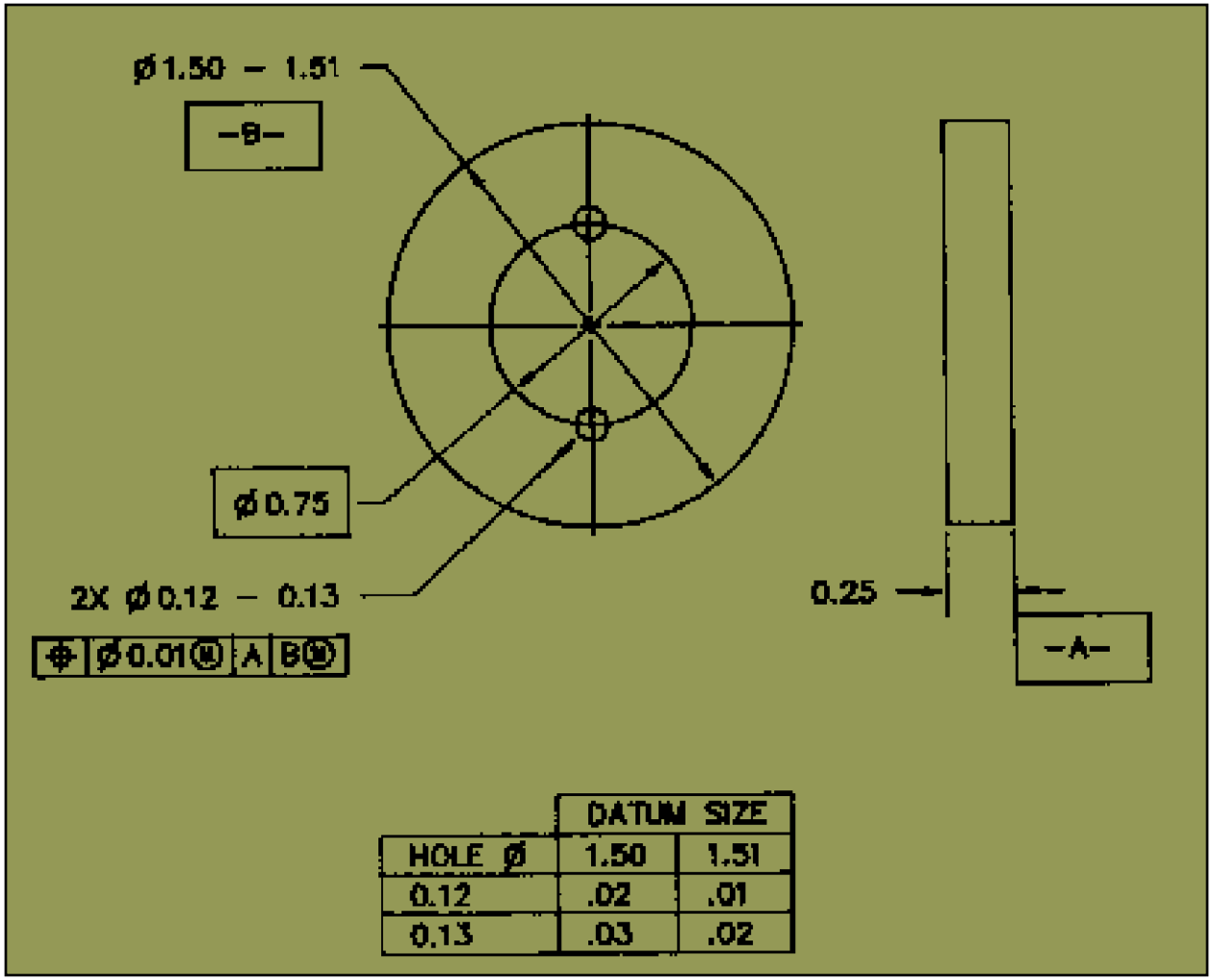

All I get at MMC of both Datam B and hole is .01!

At LMC of both, I get .03!

Example #2

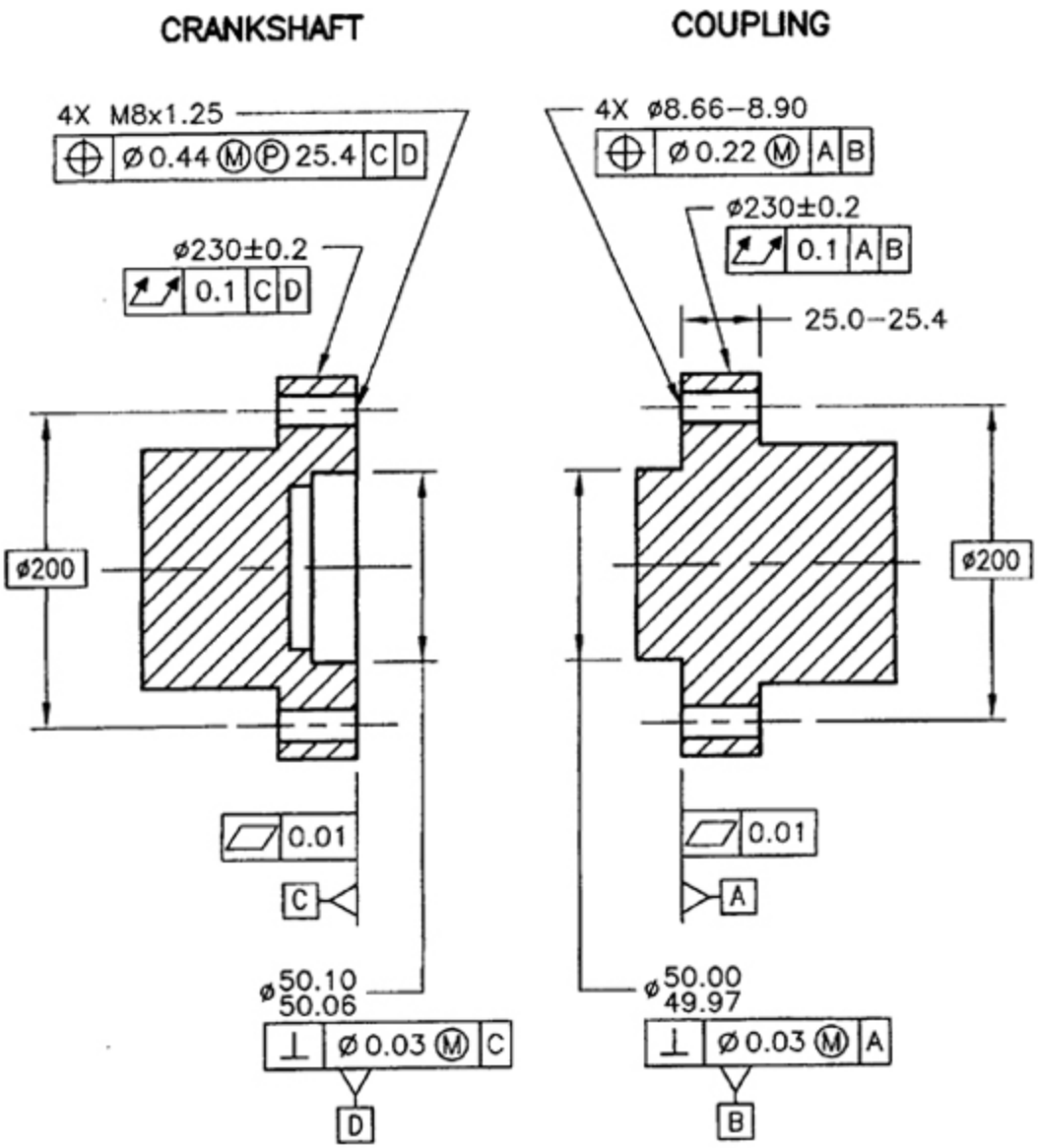
CRANKSHAFT
COUPLING
4X M8x1.25
⌀0.44 Ⓜ Ⓟ 25.4 C D
⌀230±0.2
0.1 C D
⌀200
0.01
C
⌀50.10
50.06
⌀0.03 Ⓜ C
D
4X ⌀8.66–8.90
⌀0.22 Ⓜ A B
⌀230±0.2
0.1 A B
25.0–25.4
⌀200
0.01
A
⌀50.00
49.97
⌀0.03 Ⓜ A
B

Example #3

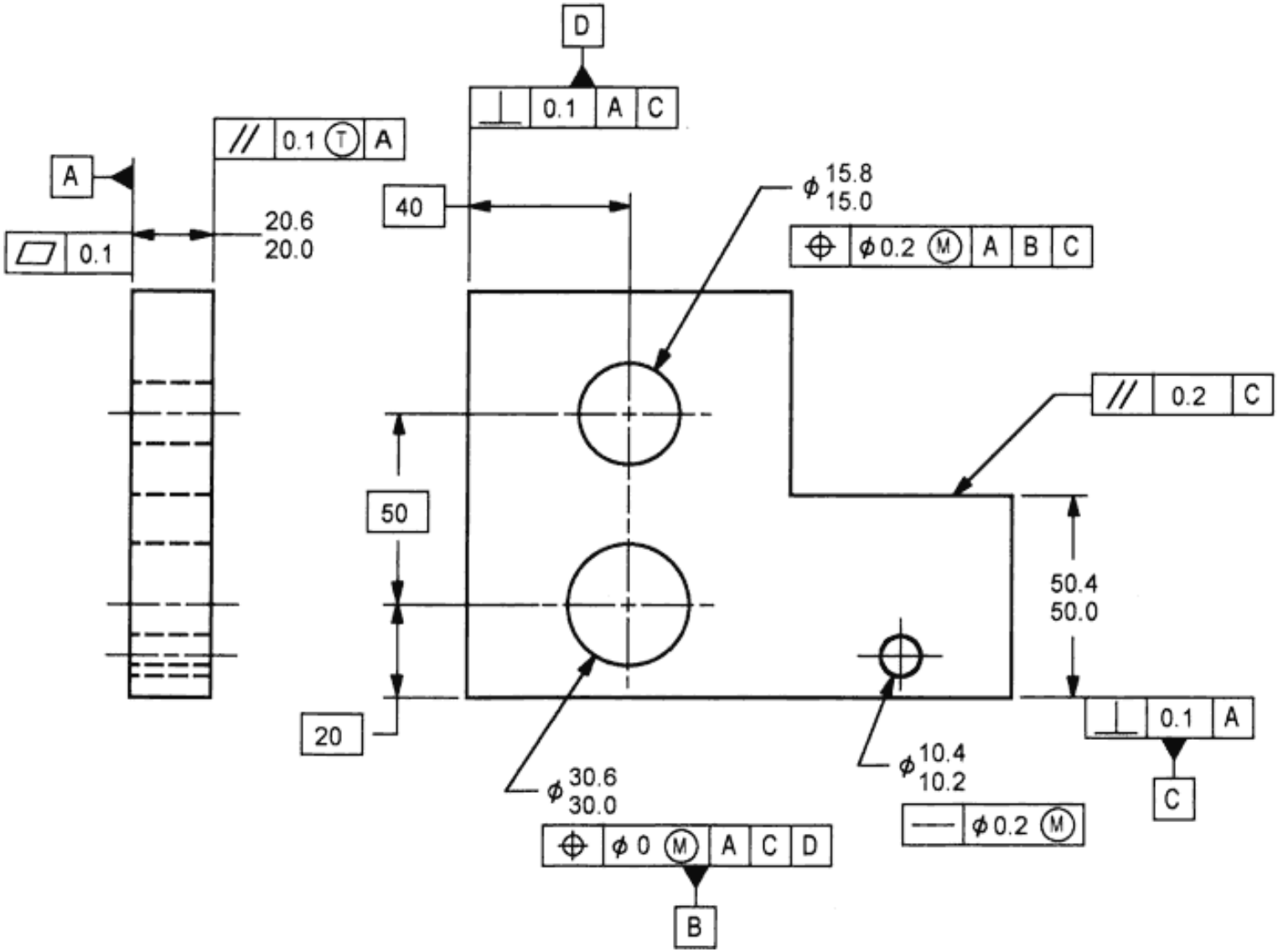
D
0.1 A C
// 0.1 Ⓣ A
A
0.1
20.6
20.0
40
ϕ 15.8
15.0
ϕ 0.2 Ⓜ A B C
// 0.2 C
50
50.4
50.0
20
0.1 A
C
ϕ 30.6
30.0
ϕ 0 Ⓜ A C D
B
ϕ 10.4
10.2
ϕ 0.2 Ⓜ

SolidWorks Note

- This is a SolidWorks seminar.
  - Maybe I should mention something “SolidWorksy” (that’s a real word).
- How about a tip about how to add custom symbols?
- The symbols, as shipped with SolidWorks 2009 and 2010, do not have the new modifier symbols for Unequal and Independency.
  - Let’s add them to the library.

Special Thanks

- While at the San Antonio SolidWorks Technical Summit, I was lamenting that we would have to wait for SolidWorks to update the symbol library for the new standard.
- Santiago Laverde, CSWP, of Halliburton in Houston sent me his notes on how to modify and add geometric symbols.
- These notes come from his idea.

Editing GTOL.SYM

- Go to your SolidWorks Load Directory\Lang\English
  - Or whatever your native language is.
- There will be a file GTOL.SYM.
- Make a copy of the file using another name.
  - This is so you can recover quickly if something bad happens.
- Use a text editor to open the file.
- The header of the file has great hints on how to make your own symbols.

GTOL.SYM header

- #<Name of library>,<Description of library>
- *<Name of symbol>,<Description of symbol>
- A,LINE xStart,yStart,xEnd,yEnd
- A,CIRCLE xCenter,yCenter,radius
- A,ARC xCenter,yCenter,radius,startAngle,endAngle
- A,FARC xCenter,yCenter,radius,startAngle,endAngle
- A,TEXT xLowerLeft,yLowerLeft,<letter(s)>
- A,POLY x1,y1,x2,y2,x3,y3
- Units:
- All x, y, and radius values are in the symbols grid space (0.0 to 1.0), where 0,0 is the lower left corner and 1,1 is the upper right corner.
- The grid space is considered to be the height of a character squared.
- All angle values are in degrees.

Existing Modifying Symbols

- #MOD,Modifying Symbols
- *FMC,Regardless of Feature Size
- A,CIRCLE .5,.5,.75
- A,TEXT .5,.5,S
- *FREES,Free State
- A,CIRCLE .5,.5,.75
- A,TEXT .5,.5,F
- *LMC,Least Material Condition
- A,CIRCLE .5,.5,.75
- A,TEXT .5,.5,L
- *MMC,Maximum Material Condition
- A,CIRCLE .5,.5,.75
- A,TEXT .5,.5,M
- *PTZ,Projected Tolerance Zone
- A,CIRCLE .5,.5,.75
- A,TEXT .5,.5,P
- *EP,Encompassing
- A,CIRCLE .5,.5,.75
- A,TEXT .5,.5,E
- *TANP,Tangent Plane
- A,CIRCLE .5,.5,.75
- A,TEXT .5,.5,T

Add These New Symbols

- #MOD,Modifying Symbols
- *UNEQ,Unequal Distribution
- A,CIRCLE .5,.5,.75
- A,TEXT .5,.5,U
- *IND,Independency
- A,CIRCLE .5,.5,.75
- A,TEXT .5,.5,I

What the Farc?

- FARC is a filled arc.
- Try this:
  - *ORIGIN,Origin
  - A,FARC 1,0,1,0,90
  - A,ARC 1,0,1,90,180
  - A,FARC 1,0,1,180,270
  - A,ARC 1,0,1,270,360
- By the way, POLY is a closed polygon.

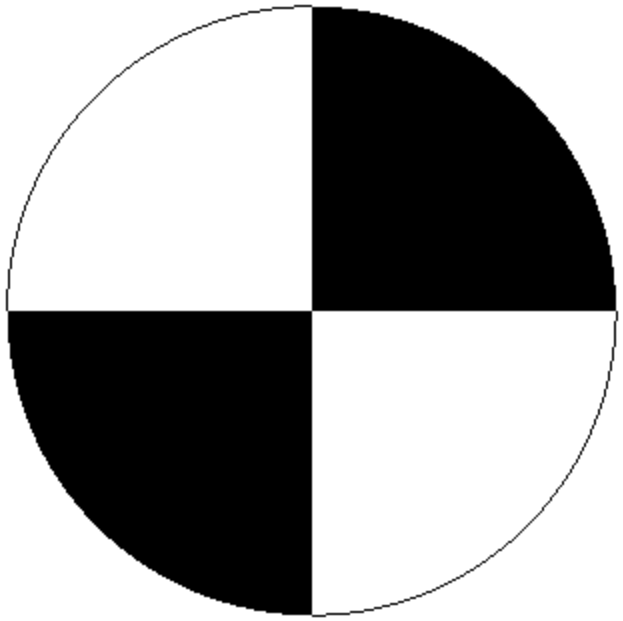

ISO 1101 Only

- I don’t keep with the European standard like I used to but an interesting concept is “Reprocity”.
- The symbol is an R in a circle.
- The idea is if the feature is located better then you get bonus size.
  - Instead of our concept of size gets you bonus location.
- This is not part of the ASME standard.

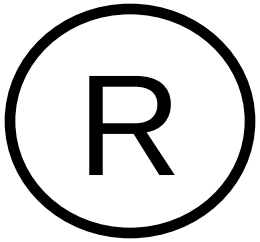

The Modifier That Isn't Circled

- There is one more kind of modifier that doesn't fit anywhere and is new.
- Translation (Datum)
  - This allows a datum to establish orientation but allows it to "translate".
  - This is better talked about when you discuss datums.

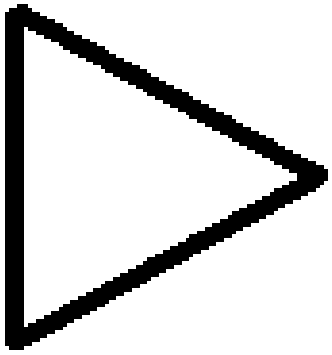

Other New ASME Y14.5M-2009 Symbols

- These new symbols are not modifiers but they are new to ASME Y14.5M-2009 and you may need to add them to your gtol.sym file:
  - Spot Face
  - Continuous Feature

SolidWorks WORLD 2010

Review of Modifers

- Extent:
  - Free State
  - Tangent Plane
  - Projected Tolerance
  - Unequally Disposed Profile (new)
- Size:
  - Regardless of Feature Size (RFS)
  - Regardless of Material Boundary (RMB)
  - Maximum Material Condition (MMC)
  - Maximum Material Boundary (MMB)
  - Least Material Condition (LMC)
  - Least Material Boundary (LMB)
  - Independency (new)

Ⓕ Ⓣ Ⓟ Ⓤ Ⓢ Ⓜ Ⓛ Ⓘ

See You Next Year for Part Three

- Possible Topics:
  - Datums – Theoretically Speaking
  - The Rise of the Tolerance Zone Ranger
  - The Wrath of Fritz and Platz
  - Gaging for Fun and Profit
  - Exceptions to the Rules
  - Fixed and Floating Fastener Calculations
    - I couldn’t think of anything clever for this one.
- Who Knows What?

Questions

- Last year, there were some really good but really in-depth questions that I didn't explain completely.
- If I blow you off this morning or don't explain something to your satisfaction in the next few minutes, hunt me down over the next days and ask your question again.
- So, what do you want to ask?
- Thomas Allsup - tallsup@anidatech.com